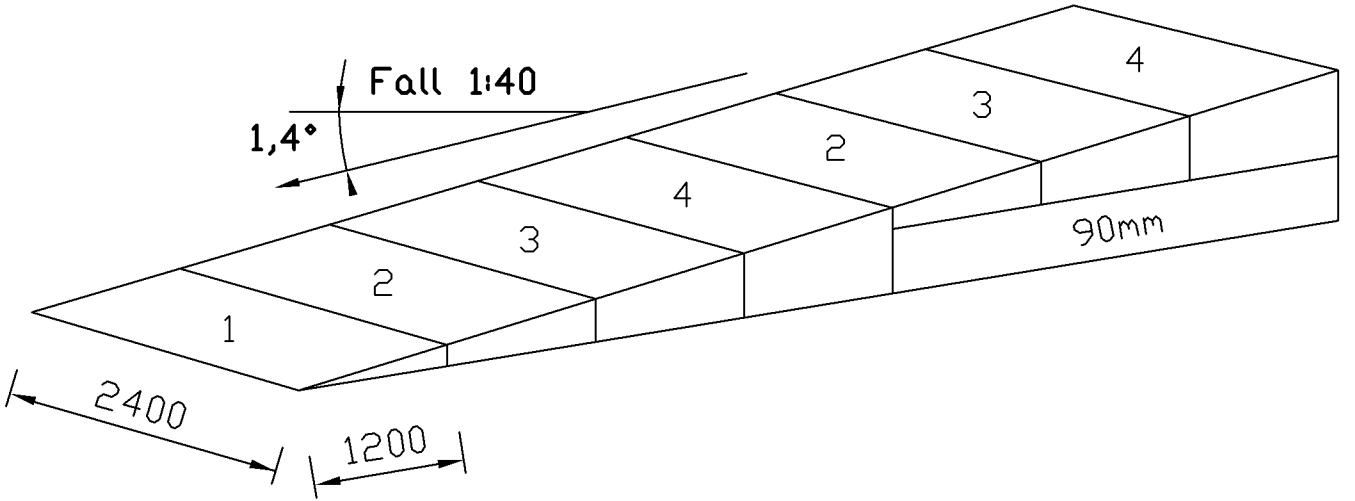
Fall 1:40
1,4°
1
2
3
4
2
3
4
90mm
2400
1200